VARIMETER
Voltage Relay
RL 9836

0273490

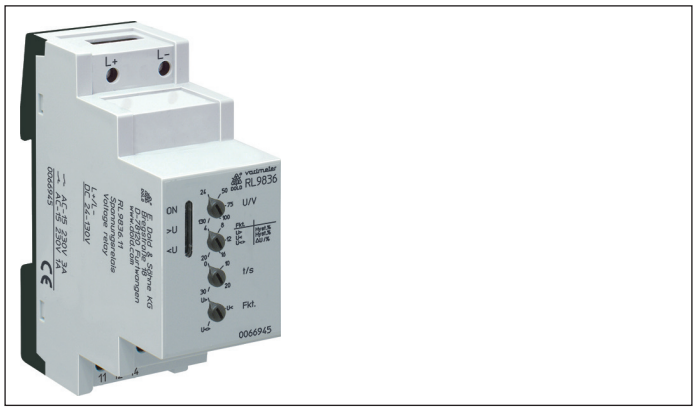

Product Description

The measuring relay RL 9836 of the VARIMETER series monitors overvoltage, undervoltage and voltage range in DC voltage systems. The measurement is very simple and without extensive wiring as there is no auxiliary power supply necessary. The monitoring functions are easily selectable using a single turn switch without complex menu structure. The early detection of up-coming break downs and preventive maintenance avoid expensive damages. As user you profit from the reliability and availability of your plant.

Circuit Diagram

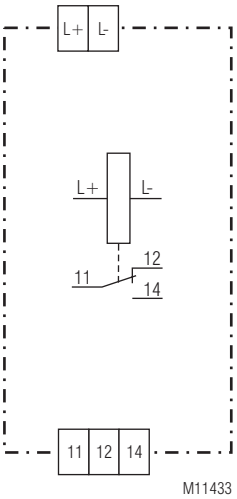

Connection Terminals

Terminal designation	Signal description
L +	Positiv voltage measuring input
L -	Negative voltage measuring input
11, 12, 14	Changeover contact (outputrelay)

Your Advantages
- Preventive maintenance
- For better productivity
- High repeat accuracy
- Wide measuring voltage range
- Easy setting

Features
- According to IEC/EN 60 255-1
- For DC monitoring
- Detection of
  - Overvoltage
  - Untervoltage
  - Voltage range excess in single-phase AC voltage systems
- No separate auxiliary necessary
- Output: 1 changeover contact
- De-energized on trip
- Adjustable switching voltage
- Adjustable hysteresis for reset
- Adjustable switching delay
- Fast fault detection
- Width: 35 mm

Approvals and Markings

CE | c UL us LISTED Canada / USA

Application

- For monitoring direct current voltage supply systems to detect undervoltage, overvoltage
- Switch over to emergency supply after fault detection

Function

When monitoring overvoltage, undervoltage and voltage range, the exceeding of the setting values above or below the thresholds is indicated by flashing of the voltage indicating LED. After the time delay the voltage indicating is continuously on and the relay de-energises. If the voltage returns to normal value, the LED goes immediately off and the output relay energises.

The output relay is de-energized on trip.

In the voltage range monitoring mode the nominal voltage range U ± △U is adjustable. An alarm is evoked in case the voltage leaves this monitoring range. The hysteresis for switching back into good condition is half the value set by the potentiometer △U.

Indicator

green LED „ON“:	on, when supply connected
red LED „>U“:	on, when overvoltage
red LED „<U“:	on, when undervoltage

All technical data in this list relate to the state at the moment of edition. We reserve the right for technical improvements and changes at any time

Function Diagrams

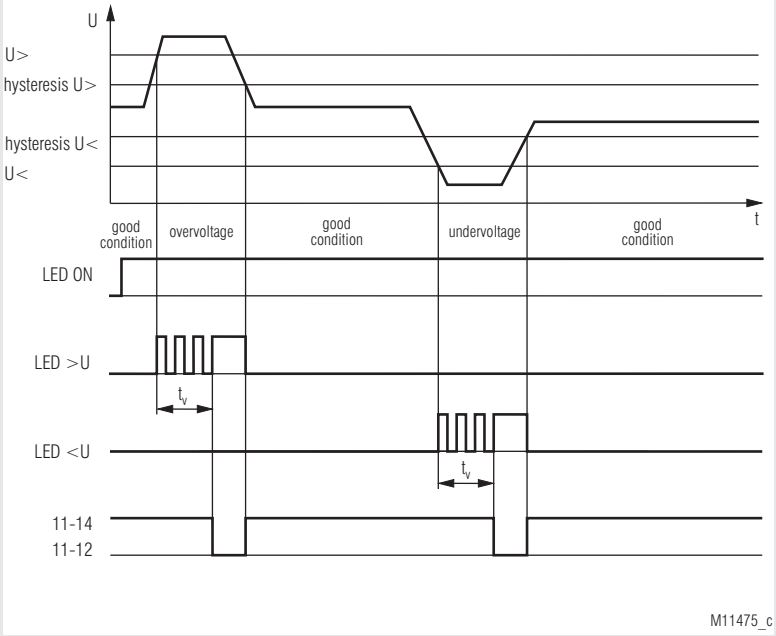

Monitoring function: overvoltage / undervoltage; rotary switch: „U>“ / „U<“

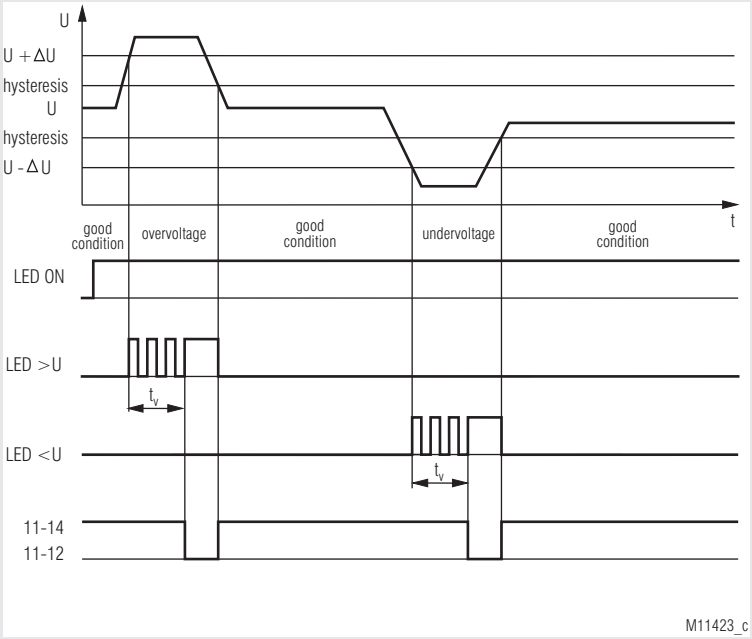

Monitoring function: voltage range; rotary switch: „U<> “

Notes

The following monitoring functions are selectable using the 3-step function switch:

Function select	Monitoring function
U>	Overvoltage
U<	Undervoltage
U<>	Voltage range

Technical Data

Input

Operating voltage U_B:	DC 24 … 130 V; DC 50 … 250 V	
Voltage rated operating U_e:	DC 28 … 118 V; DC 59 … 227 V	
Nominal consumption:	approx. 2 W	

Output

Contacts:	1 changeover contact	
Contact material:	AgNi	
Switching voltage:	AC 250 V	
Thermal current I_{th}:	5 A	
Switching capacity		
to AC 15		
NO contact:	3 A / AC 230 V	IEC/EN 60 947-5-1
NC contact:	1 A / AC 230 V	IEC/EN 60 947-5-1
Electrical life		
to AC 15 at 1 A, AC 230 V:	typ. 3 x 10^5 switching cyles	
Short circuit strength		IEC/EN 60 947-5-1
max. fuse rating:	5 A gL	
Mechanical life:	> 30 x 10^6 switching cyles	

Measuring circuit

Measuring voltage:	infinite adjustable DC 24 … 130 V; DC 50 … 250 V
Hysteresis:	infinite adjustabler 4 ... 20 %
Switching delay t_v:	infinite adjustable instantaneuos, 2 … 30 s
Repeat accuracy:	± 2 %
Temperature influence:	± 1 % **Attention:** **The combination of adjusted switching voltage U and hysteresis △U must be within the measuring range**

General Data

Operating mode:	continuous operation	
Temperature range		
Operation:	- 20 ... + 55 °C	
Storage:	- 25 ... + 60 °C	
Relative air humidity:	93 % at 40 °C	
Altitude:	< 2,000 m	
Clearance and creepage distances		
Rated impuls voltage/ Pollution degree:	4 kV / 2	IEC 60 664-1
EMC		
Electrostatic discharge (ESD):	8 kV (air)	IEC/EN 61 000-4-2
HF irradiation		
80 MHz ... 1 GHz:	12 V / m	IEC/EN 61 000-4-3
1 GHz ... 2,7 GHz:	10 V / m	IEC/EN 61 000-4-3
Fast transients:	2 kV	IEC/EN 61 000-4-4
Surge		
between		
wires for power supply:	2 kV	IEC/EN 61 000-4-5
between wire and ground:	4 kV	IEC/EN 61 000-4-5
HF wire guided:	10 V	IEC/EN 61 000-4-6
Interference suppression:	Limit value class B	EN 55 011
Degree of protection:		
Housing:	IP 40	IEC/EN 60 529
Terminals:	IP 20	IEC/EN 60 529
Enclosure:	Thermoplastic with V0 behaviour acc. to UL subject 94	
Vibration resistance:	Amplitude 0.35 mm Class I	IEC/EN 60 255-21
Climate resistance:	20 / 055 / 04	IEC/EN 60 068-1
Terminal designation:	EN 50 005	

Technical Data

Wire connection:		DIN 46 228-1/-2/-3/-4
Fixed screw terminals		
Cross section:	0.2 ... 4 mm² (AWG 24 - 12) solid or 0.2 ... 2.5 mm² (AWG 24 - 12) stranded wire with and without ferrules	
Stripping length:	7 mm	
Fixing torque:	0.6 Nm	EN 60 999-1
Wire fixing:	Captive slotted screw / M2.5	
Mounting:	DIN rail	IEC/EN 60 715
Nettogewicht:	approx. 105 g	

Dimensions

Width x height x depth:	35 x 90 x 71 mm

UL-Data

ANSI/UL 60947-1, 5th Edition
ANSI/UL 60947-5-1, 3rd Edition

CAN/CSA-C22.2 No. 60947-1-13, 2nd Edition
CAN/CSA-C22.2 No. 60947-5-1-14, 1st Edition

Switching capacity:	Pilot duty B300 5A 240Vac Resistive, G.P. 5A 30Vdc Resistive or G.P. 5A 250Vac G.P.
Wire connection:	60°C / 75°C copper conductors only AWG 24 - 12 Sol/Str Torque 0.6 Nm

Technical data that is not stated in the UL-Data, can be found in the technical data section

Standard Type

RL 9836.11/61 DC 50 ... 250 V 4 ... 20 % 0 ... 30 s

Article number:	0066430
• Output:	1 Wechsler
• Operating voltage:	DC 50 ... 250 V
• Hysteresis:	4 ... 20 %
• Switching delay:	0 ... 30 s
• Width:	35 mm

Ordering example

RL 9836 .11 /00 /61 DC 50 ... 250 V 4 ... 20 % 0 ... 30 s

- Switching delay
- Hysteresis
- Operating voltage
  DC 50 ... 250 V
  DC 24 ... 130 V
- UL approval
- Operation mode/Outputs
  0: De-Energized on trip
  1: Energized on trip
- Contacts
- Type

Connection Example

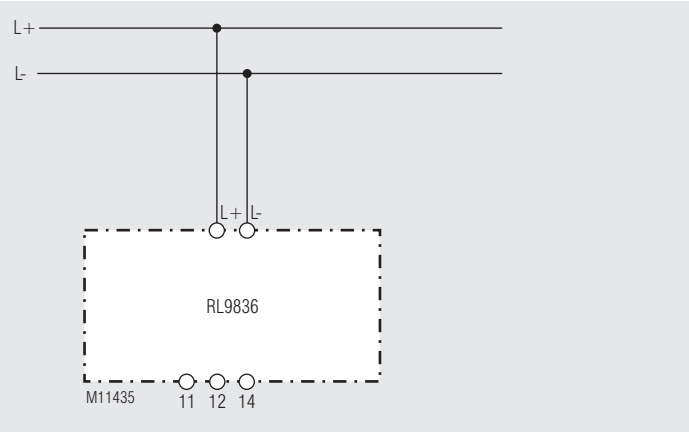

Single-phase connection